BUSTER + PUNCH
LONDON

HOOKED WALL / NUDE

TECH SPEC

HOOKED WALL / NUDE
GRAPHITE / STEEL

HOOKED WALL / NUDE
STONE / BRASS

HOOKED WALL / NUDE
STONE / SMOKED BRONZE

HOOKED WALL / NUDE

A wall light made from solid metal with matt rubber detailing. The base is finished in either *stone* or *graphite* powder coating. The pendant length can be adjusted to suit and hooked onto a solid metal hook. Can be fitted as standalone or connected to a us outlet box. Buster + Punch offers a range of light bulbs that look great with this light and are sold separately.

busterandpunch.us
info@busterandpunch.us

illuminations
425 Peachtree Hills Ave. NE #3 Atlanta, GA 30305
404.876.1064 sales@illumco.com

BUSTER+PUNCH
LONDON

HOOKED WALL / NUDE

SPECIFICATIONS:

E26 / 110-120V / Dry locations
Max 40W type A bulb
Bulb sold separately
Suitable for both 3.5 and 4'' junction boxes
Wall mount only
cULus approved

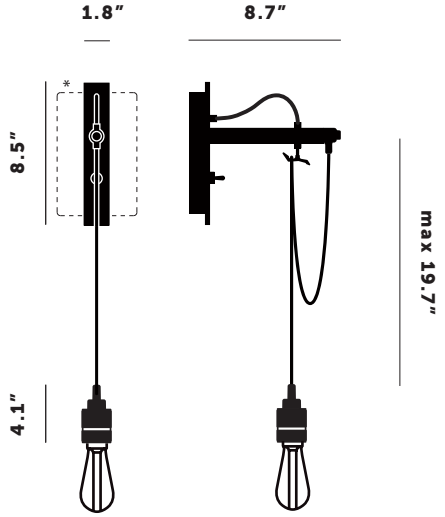

FROM THE BACK:

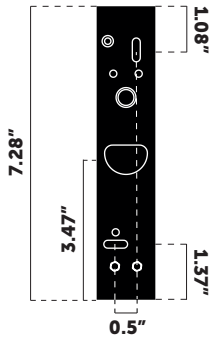

US OUTLET BOX COVER PLATE:

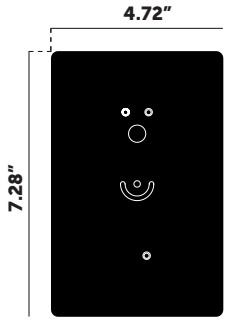

FINISH	SKU
Graphite / Steel	NHW-19340
Graphite / Brass	NHW-18338
Graphite / Smoked Bronze	NHW-20339
Stone / Steel	NHW-23337
Stone / Brass	NHW-25335
Stone / Smoked Bronze	NHW-24336

ALSO INCLUDED:

1x us outlet box cover plate
1x bracket
1x coin cap installation tool*
3x wire nuts

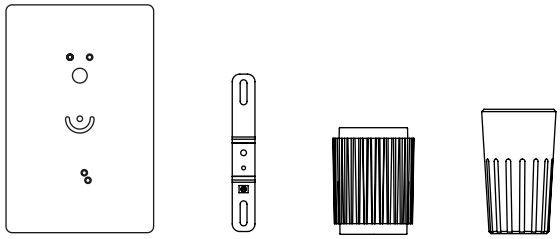

1 pc 1 pc 1 pc 3 pcs

CARE INSTRUCTIONS

Wipe with damp cloth with no loose hairs, avoid using any chemicals. Please note all finishes are prone to aging.

*Coin cap installation tool **must be used by hand only.**

illuminations
425 Peachtree Hills Ave. NE #3 Atlanta, GA 30305
404.876.1064 sales@illumco.com