BUSTER + PUNCH
LONDON

[product.
EXHAUST / PENDANT

[type. **PENDANT SPOTLIGHT.**]
[knurl. **LINEAR.**]
[detail. **TORX SCREW.**]

A pendant spotlight with a powder coated metal body and solid metal detailing. The pendant features our signature linear-knurl baffle and machined torx screws, both made from solid metal. The baffle captures light and creates a delicate metallic glow, whilst a honeycomb filter emits a precise, non-glare, directional spotlight. This spotlight fits a GU10 bulb.

[body. **GRAPHITE.**]
[detail kit. **STEEL.**]

[body. **GRAPHITE.**]
[detail kit. **BRASS.**]

[body. **GRAPHITE.**]
[detail kit. **GUN METAL.**]

[body. **GRAPHITE.**]
[detail kit. **BURNT STEEL.**]

illuminations
425 Peachtree Hills Ave. NE #3 Atlanta, GA 30305
404.876.1064 sales@illumco.com

BUSTER + PUNCH
LONDON

[product.
EXHAUST / PENDANT

[type. **PENDANT SPOTLIGHT.**]
[knurl. **LINEAR.**]
[detail. **TORX SCREW.**]

A pendant spotlight with a powder coated metal body and solid metal detailing. The pendant features our signature linear-knurl baffle and machined torx screws, both made from solid metal. The baffle captures light and creates a delicate metallic glow, whilst a honeycomb filter emits a precise, non-glare, directional spotlight. This spotlight fits a GU10 bulb.

[body. **STONE.**]
[detail kit. **STEEL.**]

[body. **STONE.**]
[detail kit. **BRASS.**]

[body. **STONE.**]
[detail kit. **GUN METAL.**]

[body. **STONE.**]
[detail kit. **BURNT STEEL.**]

illuminations
425 Peachtree Hills Ave. NE #3 Atlanta, GA 30305
404.876.1064 sales@illumco.com

[type. **PENDANT SPOTLIGHT.**]

[info. **MEASUREMENTS.**]

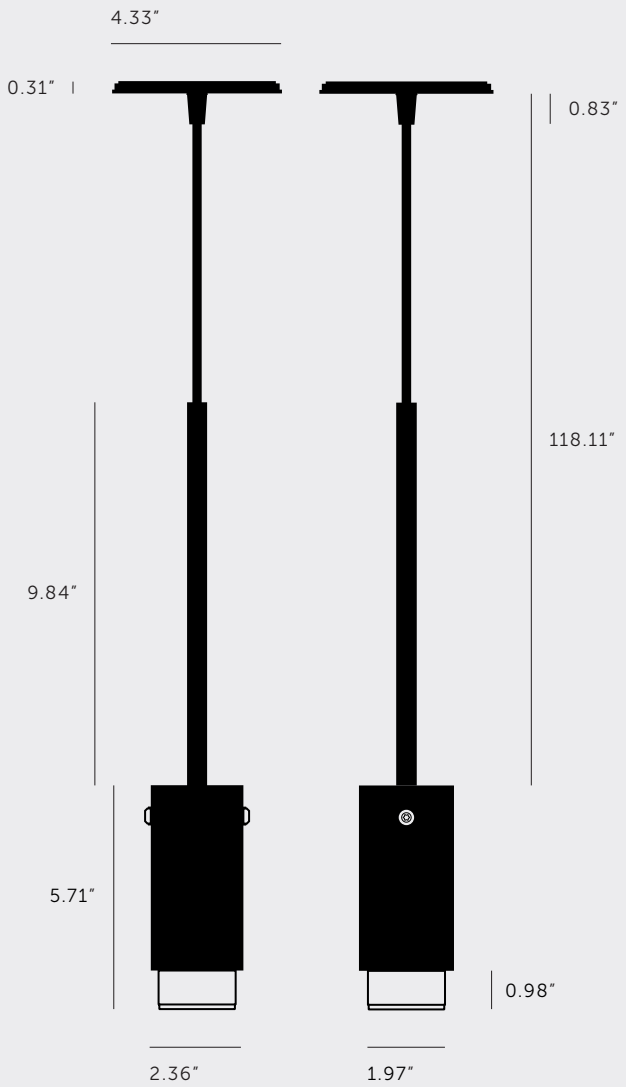

[info. **SPECIFICATIONS.**]

Pendant spotlight

GU10 / 110-120VAC / Dry locations

Max 1 x 9W LED GU10 bulb

Bulb sold separately

cULus certified / Class 1

[info. **FINISH & SKU NUMBERS.**]

[body. **FINISH.**]	[sku.]
Graphite	NBB-17697
Stone	NBB-21698
[detail kit. **FINISH.**]	[sku.]
Steel	NBB-07689
Brass	NBB-05688
Gun Metal	NBB-35690
Burnt Steel	NBB-36796

[info. **CARE INSTRUCTIONS.**]

Wipe with damp cloth with no loose hairs, avoid using any chemicals. Please note all finishes are prone to aging.

[info. **ALSO INCLUDED.**]

1x baffle

1x honeycomb filter

2x torx screws

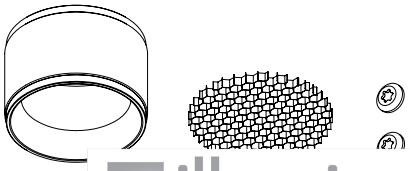

1 p

illuminations
425 Peachtree Hills Ave. NE #3 Atlanta, GA 30305
404.876.1064 sales@illumco.com