Dome - 90

Name: DOME - 90

Design: Benedetta Tagliabue / EMBT / 2015

Typology: Pendant lamp

Environment: Indoor

Technical description:
Big Format interior pendant made of more than 170 puzzled wood pieces in beech veneer finish.
The LED light is above the wooden structure to illuminate throughout the open and diffused portions casting beautiful shadow patterns on surfaces below. Due to the sculptural nature and requirement to have LED lamping above the fixture, a minimum height of 120cm/47.24in is required. Dome is in 3 sizes: 180, 90 and 60 cm.
Custom colors on request.
Consult for alternative dimming options.

Lamps description

25 W LED
Lumens: 2750 lm
CRI: 82
Degrees Kelvin: 2700º

Voltage: 120-277V / 50-60Hz

1 Box 39.37 x 39.37 x 45.28 inches

Vol.: 40.6119 ft³

Weight: 41.89 lbs Net weight: 17.64 lbs

Certifications:

Ref	Finishings
2580921000U	DIM 0-10V Matte White
2580921012U	DIM 0-10V Matte Black
Lampshade	
P-811	Natural Wood
Dimmable	
Not Customizable	

Measures

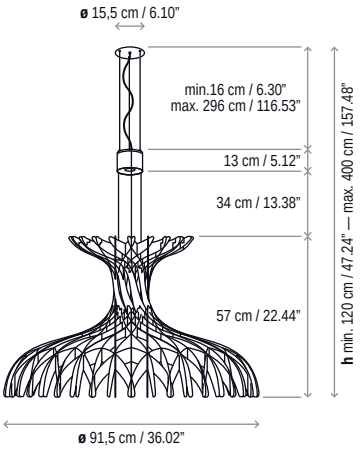

illuminations
425 Peachtree Hills Ave. NE #3 Atlanta, GA 30305
404.876.1064 sales@illumco.com

Dome - 60 / 01

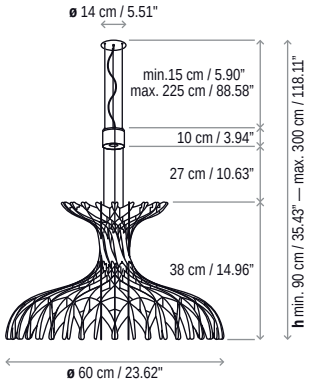

Dome - 60 / 02

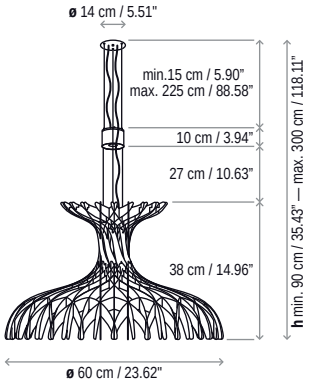

Dome - 90

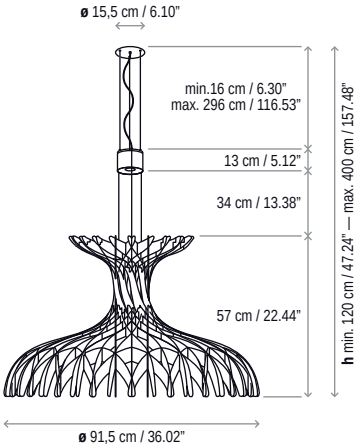

Dome - 180

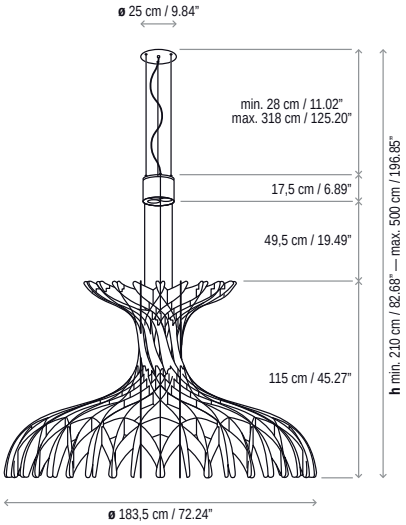

illuminations
425 Peachtree Hills Ave. NE #3 Atlanta, GA 30305
404.876.1064 sales@illumco.com