# FAVILLA - CEILING, WALL, & SPOT LIGHT - technical sheet

design
**Manuel Vivian**

Adjustable wall or ceiling light or spotlight in cast aluminium painted matt black. High Power LED 1 x 6.2W light source.

Lámpara de pared o de techo o proyector de aluminio fundido pintado de color negro mate, orientable. Fuente de luz High Power LED 1 x 6.2W.

Applique ou plafonnier ou spot en fonte d'aluminium peinte noir opaque orientable. Source lumineuse High Power LED 1 x 6.2W

Lampada a parete o a soffitto o proiettore in alluminio in fusione verniciato nero opaco orientabile. Fonte luminosa High Power LED 1 x 6.2W.

**FAVILLA** / 6.2 W / 350mA / DRY LOCATION / CRI 80 / PSU included / backplate included

| Zone | Type | Article | System compatibility | Finish | LED colour temperature | Beam options |
|---|---|---|---|---|---|---|
| K | 6 | 105 | 0 | 04 black matt | 1 3000 K | 1 22° |
| | | | | 07 white 9016 matt | 3 4000 K | 3 45° |

example composition code |K |6 |105 |0 |04 |1 |1

**DRY LOCATION** **J-BOX driver**

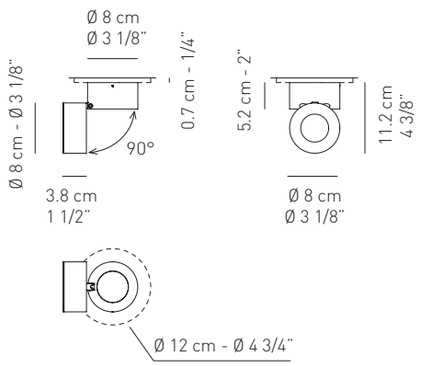

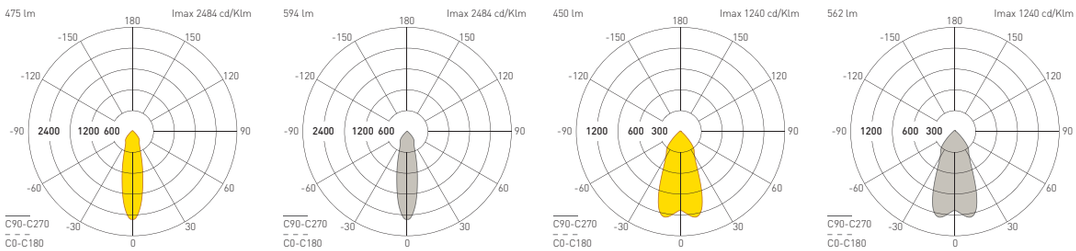


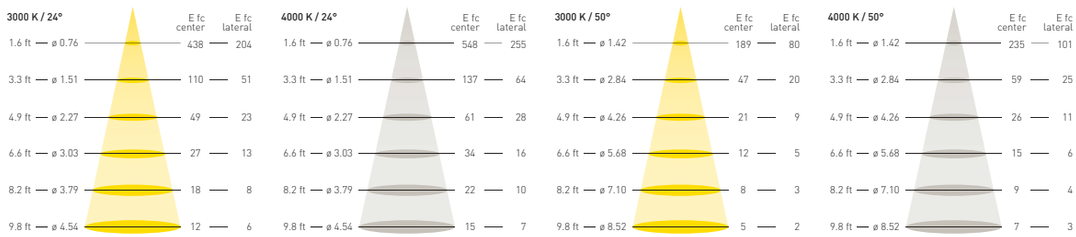


***PSU included.** For optional drivers, dimming technology, photometric data, or assembly instructions please refer to our web site: www.axolightusa.com or contact our representative

**POWER SUPPLY:** CONSTANT CURRENT

**TOTAL WATTAGE:** 12W

**DIMMING TECHNOLOGY:** 10% DIMMING ELV

**PLEASE NOTE:** For driver installation, the minimum volume capacity is 21.5 cubic inches for 4 inch square J-Box. Follow NEC/local electrical codes and use a qualified electrician when installing the fixture. All Axo Light Mind-LED related products have a 3-year warranty from the date of original purchase. Technical data could be subject to alteration without notice.

**DRIVER: UCEDLHA00111**

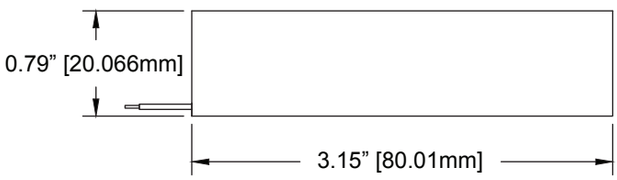


**UMDKTMINDUNV (optional Mud Kit)**
drywall flush mounting kit for 4" square/octagonal J-Box

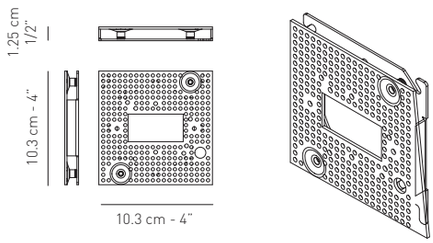


FAVILLA

NAME _____

NOTES _____

ITEM CODE: K61050

AXO LIGHT USA inc., 22 Shelter Rock Lane - DANBURY, CT 06810, USA - P +1 (203) 730 0452 - F +1 (203) 730 0460
For further information contact Axo Light USA

illuminations
425 Peachtree Hills Ave. NE #3 Atlanta, GA 30305
404.876.1064 sales@illumco.com