Bol S/6L

Design / *Diseño*:
Estudi Manel Molina / 2022

Typology: Pendant lamp
Tipología: Suspensión

Environment: Indoor
Ambiente: Interior

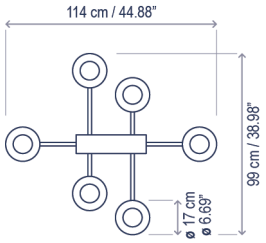

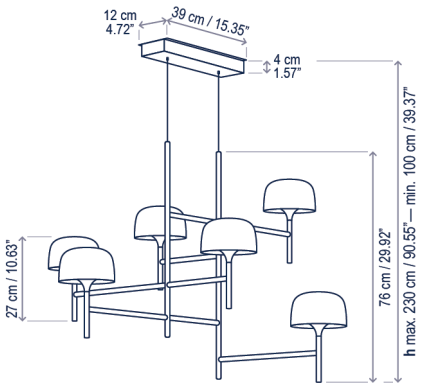

Technical description / *Descripción técnica*:

Net Weight: Consult
Peso Neto: Consultar

1 Box/*Caja* | Consult / *Consultar*
Gross Weight: Consult /*Peso bruto: Consultar*

Materials: Aluminum, Brass, Polycarbonate
Materiales: Aluminio, Latón, Policarbonato

Direct and indirect diffused light
Luz directa e indirecta

Dali option: consult
Opción Dali: consultar

Please check the list of recommended TRIAC dimmers at page 277.
Consulte la tabla de reguladores TRIAC recomendados en la página 277.

For Casambi dimmers, consult
Para regulaciones Casambi, consultar

Customizable: consult
Personalizable: consultar

Certifications
Certificaciones

Lamps description / *Descripción lámpara*:

120V 60Hz | DRY | IP-20 | TRIAC | 6 x 12 W LED / CRI: 90 / 2700K
10080 lm light source / *fuente de luz*

Ref	Finishing / *Acabados*	Ean13
20102215012U	Dimmable Triac - Matte Black *Regulable Triac - Negro Mate*	8435493711553

Lamps description / *Descripción lámpara*:

120V 60Hz | DRY | IP-20 | 0-10V | 6 x 12 W LED / CRI: 90 / 2700K
10080 lm light source / *fuente de luz*

Ref	Finishing / *Acabados*	Ean13
20102210012U	Dimmable 0-10V - Matte Black *Regulable 0-10V - Negro Mate*	8435493711607

bover
barcelona lights

1231 Collier Road,
Suite C
Atlanta, GA 30318
United States

T. +1 (404) 924 2342
info@boverusa.com
www.boverusa.com

Family / *Familia*: Bol

A/01	S/4L	S/6L	M/30	M/33	P/130

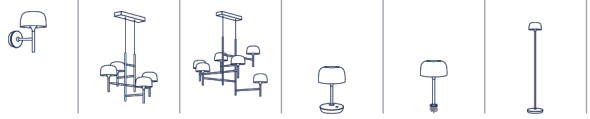

illuminations
597 Cooledge Ave NE, Atlanta, GA 30306
404.876.1064 sales@illumco.com
02/25/2022 - 18:16